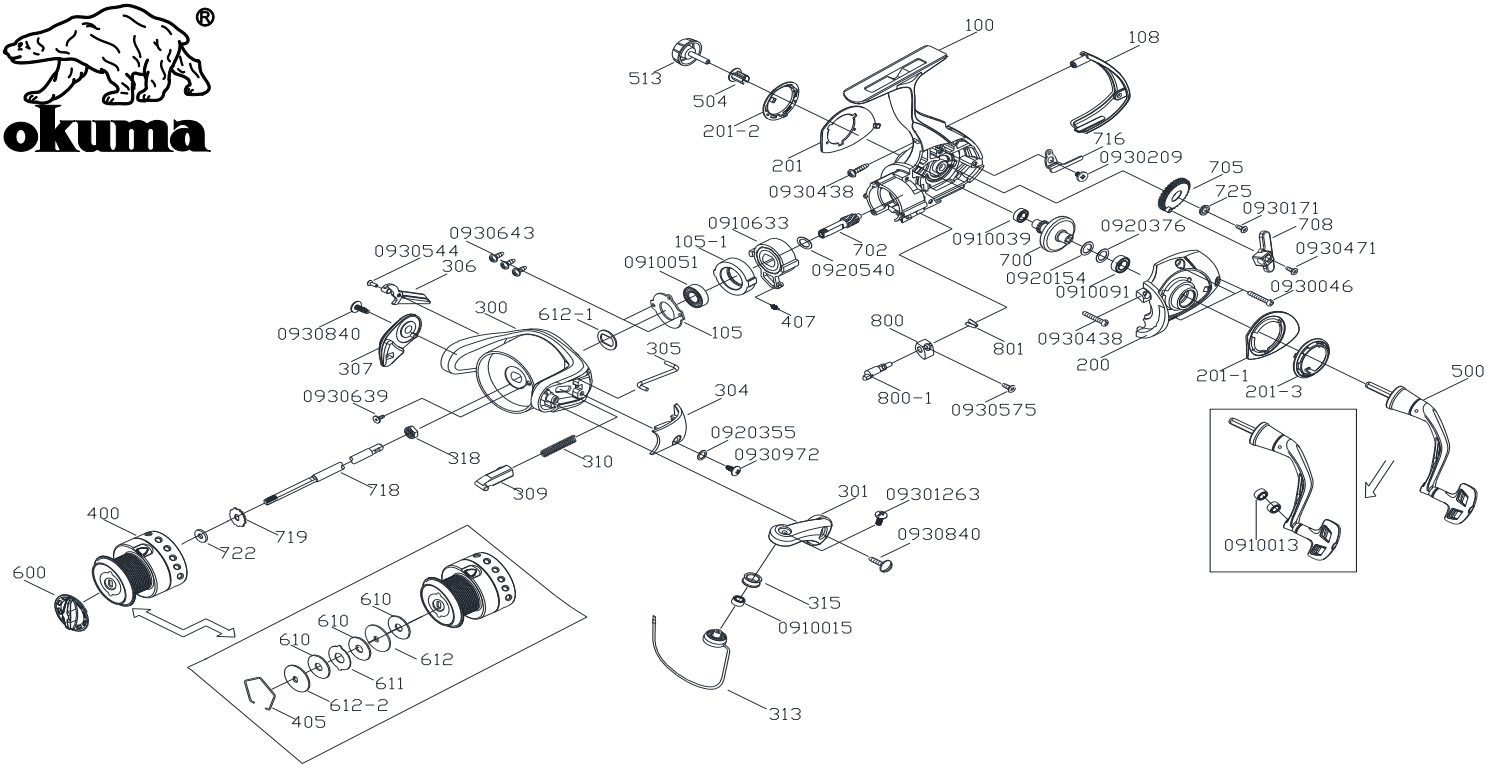

AV-40b WH PARTS LIST

KEY NO	PARTS NO	PARTS NAME	KEY NO	PARTS NO	PARTS NAME
100	21003755	MAIN BODY	702	27020903	PINION GEAR
105	21050027	PINION BEARING FIXED PLATE	705	27050105	TRANSMISSION GEAR
105-1	21056578	PINION BEARING FIXED BUSHING	708	27080095	OSCILLATING SLIDER
108	21081451	CAP	716	27160007	OSCILLATION SLIDER PLATE
200	22003868	SIDE PLATE	718	27180705	MAIN SHAFT
201	22010219	MAIN BODY DECORATION	719	27190025	CLICK GEAR
201-1	22010220	SIDE PLATE DECORATION	722	27220009	CLICK GEAR WASHER
201-2	22010245	MAIN BODY DECORATION	725	27250020	TRANSMISSION GEAR BUSHING
201-3	22010246	SIDE PLATE DECORATION	800	28000242	ANTI-REVERSE/ANTI-RE LEVER
300	23004740	ROTOR	800-1	28000322	ANTI-REVERSE/ANTI-RE LEVER
301	23011776	BAIL ARM	801	28010024	ANTI-RE LEVER SPRING
304	23042532	BAIL ARM COVER	0910633	0910633	BALL BEARING
305	23050146	KICK LEVER	0910039	0910039	BALL BEARING
306	23060969	BAIL HOLDER COVER	0910051	0910051	BALL BEARING
307	23071462	BAIL HOLDER	0910091	0910091	BALL BEARING
309	23090002	BAIL ARM SLIDER	0910015	0910015	BALL BEARING
310	23100005	COMPRESSION SPRING	0910013	0910013	BALL BEARING
313	23131377	BAIL WIRE ASSY.	0920540	0920540	WASHER
315	23150010	LINE ROLLER	0920355	0920355	WASHER
318	23180005	ROTOR NUT	0920376	0920376	WASHER
400	240013873	SPOOL ASSY.	0920154	0920154	WASHER
405	24050042	DRAG WASHER RETAINER	0930046	0930046	SCREW
407	24070009	EXTENSION SPRING	0930575	0930575	SCREW
500	25005424	HANDLE ASSY.	0930171	0930171	SCREW
504	25040004	HANDLE SCREW CAP WASHER	0930209	0930209	SCREW
513	25130788	HANDLE CAP	0930438	0930438	SCREW
600	26002995	DRAG KNOB ASSY.	0930471	0930471	SCREW
610	26100011	DRAG WASHER	0930544	0930544	SCREW
611	26110005	EARED WASHER	09301263	09301263	SCREW
612	26120006	KEY WASHER	0930643	0930643	SCREW
612-1	26120054	KEY WASHER	0930972	0930972	SCREW
612-2	26120007	KEY WASHER	0930840	0930840	SCREW
700	27000322	DRIVE GEAR	0930639	0930639	SCREW